HOUSE of LÉON
GLOBAL COLLECTIONS

ANTWERP SLIPCOVER OTTOMAN

The Antwerp Slipcover Ottoman carries the same relaxed refinement as the rest of the collection. Designed to pair seamlessly with the sofa, armchair, or chaise, it completes the composition and invites effortless lounging.

SHOP

Product Details

Removable slipcover in medium-weight 100% linen or brushed cotton woven in the Netherlands, both options are designed to fall with a natural drape. Seat cushion features a box-quilted down top; back cushions are filled with a balanced blend of down feather and fiber for lasting comfort. Lifetime warranty on all frames is included.

Dimensions

Overall: 33" W x 23" D x 16" H

Available in

Linen Bone	Linen Cocoa	Linen White	Brushed Cotton Rust	Brushed Cotton Vtg Black

HOUSE of LÉON
GLOBAL COLLECTIONS
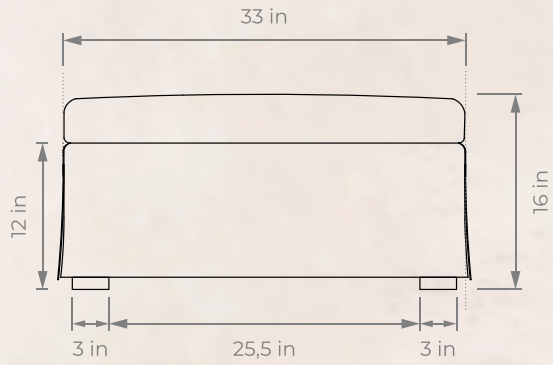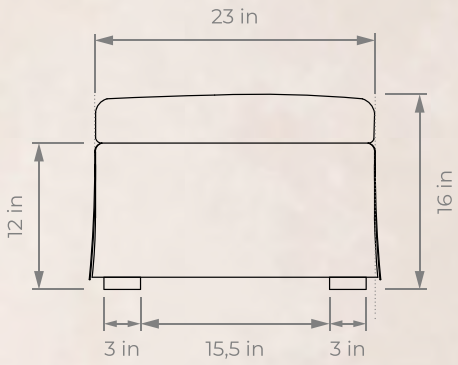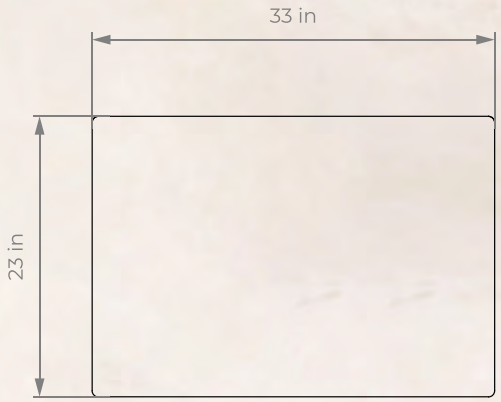
ANTWERP SLIPCOVER OTTOMAN