HOUSE of LEON
GLOBAL COLLECTIONS

ANTWERP SLIPCOVER ARMCHAIR

The Antwerp Slipcover Armchair is defined by proportion and material honesty, designed to hold its ground with quiet permanence. Its curved back and enclosed arms create a compact, continuous silhouette, while the generous seat depth and low stance give it weight without excess. Box-quilted down cushions offer enduring comfort, settling into a composed, lived-in presence.

SHOP

Product Details

Removable slipcover in medium-weight 100% linen or brushed cotton woven in the Netherlands, both options are designed to fall with a natural drape. Seat cushion features a box-quilted down top; back cushions are filled with a balanced blend of down feather and fiber for lasting comfort. Lifetime warranty on all frames is included.

Dimensions

Overall: 34" W x 38" D x 33,5" H

Available in

Linen Bone	Linen Cocoa	Linen White	Brushed Cotton Rust	Brushed Cotton Vtg Black

HOUSE of LÉON
GLOBAL COLLECTIONS
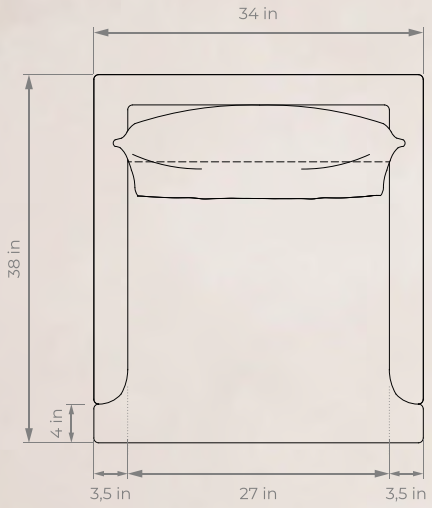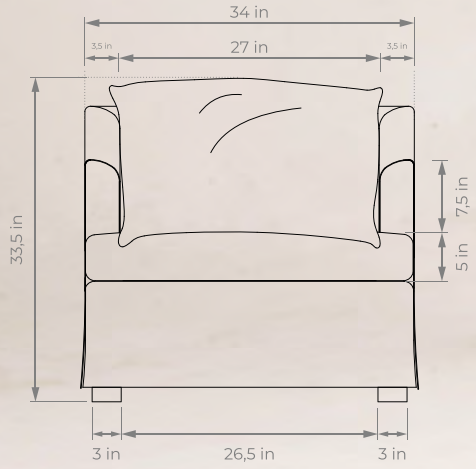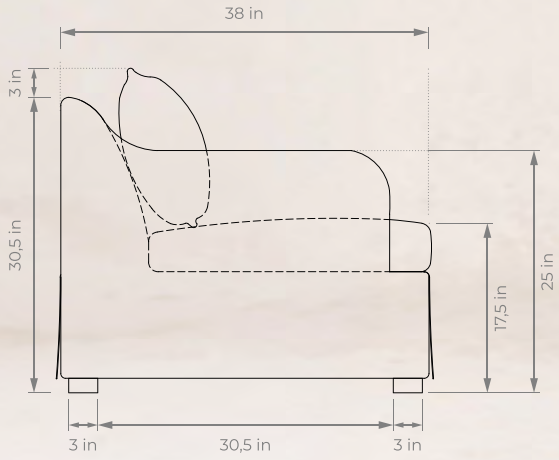
ANTWERP SLIPCOVER ARMCHAIR